1990 Jeep Truck Cherokee 4WD L6-242 4.0L VIN L FI
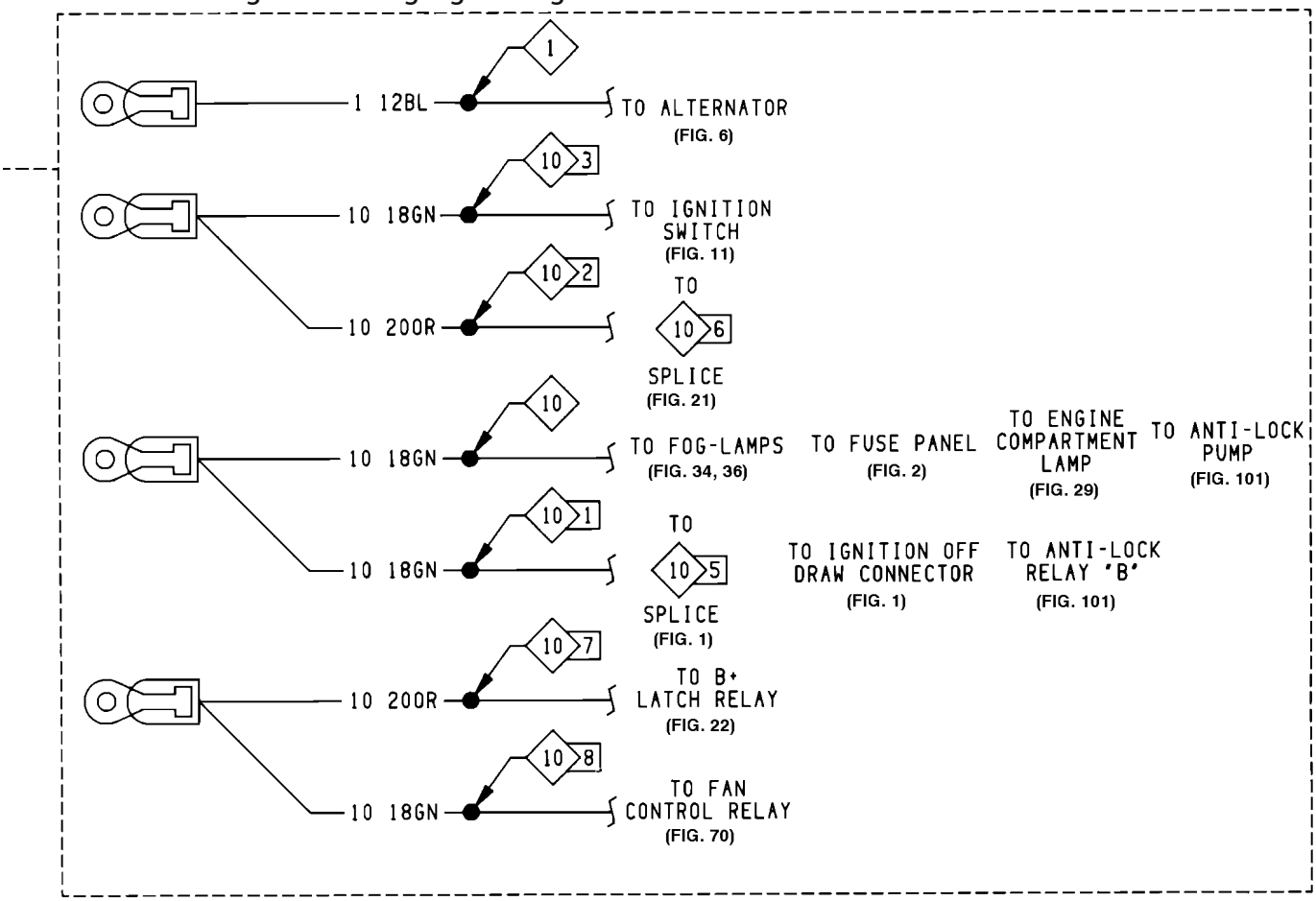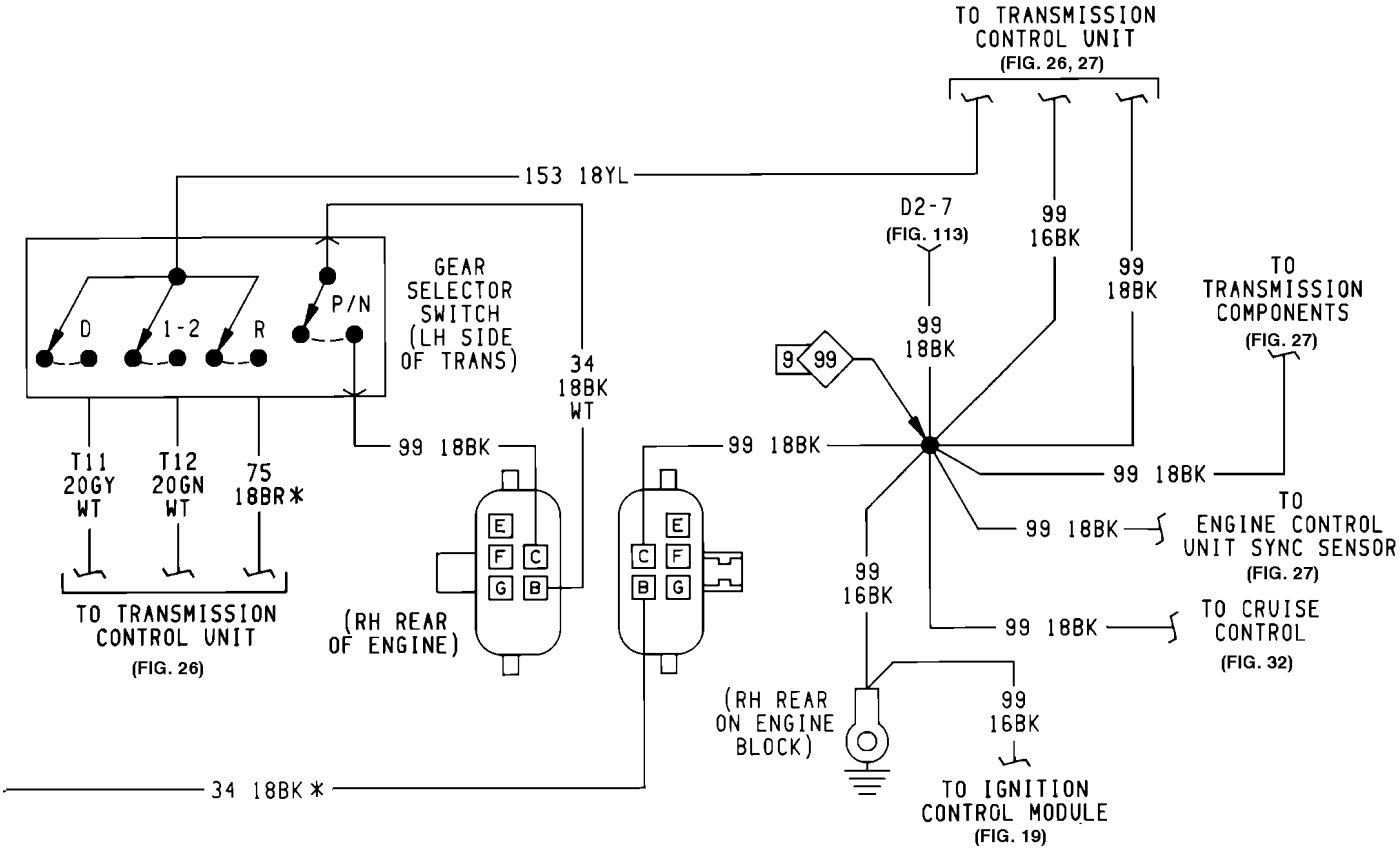
Vehicle > Starting and Charging > Diagrams